MODEL 15D

Dynamic Fire Damper • 1½ Hr. Rated • Curtain Blade • Horizontal and Vertical Mount • Galvanized Steel

Standard Construction and Materials

FRAME: 22-GA galvanized steel, one-piece rollformed
BLADE: 22-GA galvanized steel, curtain type
FUSIBLE LINK: UL-Listed 165°F; Replaceable
CLOSURE SPRINGS: Heat-treated Type 301 stainless steel constant force coiled negator type
FINISH: Mill

Options

212°F Replaceable Fusible Link
Factory-Supplied Sleeves (20-GA through 10-GA)
PK1202 Position Indicator Switch
B-Pan, Round, Oval, or Square Transitions
Tab-Lock Retaining Angles
Perimeter Flange
Pull Ring

Notes

1. Nominal deductions will be made to the opening size given.

UNDERWRITERS LABORATORIES INC.®
DYNAMIC CURTAIN FIRE DAMPER
FIRE RESISTANCE RATING 1½ HR
FILE # R6462

This fire damper meets the construction and performance requirements of:

- Underwriters Laboratories Inc. Standard 555
- National Fire Protection Association Standards 80 and 90A
- ICC's International Building Code
- California State Fire Marshal Listing #3225-1328:100

- Underwriters Laboratories Inc. Approved for dual direction airflow and dynamic conditions.
- Underwriters Laboratories Inc. Classified for use in fire resistive ratings of less than 3 hours.

Damper Sizes

Horizontal Sizing

		2000 fpm, 4 in.w.g.		2000 fpm, 8 in. w.g.		4000 fpm, 4 in. w.g.	
Sizes	Min Panel	Max Single Panel	Max Assembly	Max Single Panel	Max Assembly	Max Single Panel	Max Assembly
A - Frame	4"W x 4"H	24"W x 24"H	72"W x 36"H	18"W x 36"H	36"W x 36"H	18"W x 36"H	36"W x 36"H
B - Frame	4"W x 3"H (duct) (4"W x 5"H frame)	24"W x 20"H (duct) (24"W x 24"H frame)	72"W x 31"H (duct) (72"W x 36"H frame)	18"W x 31"H (duct) (18"W x 36"H frame)	36"W x 31"H (duct) (36"W x 36"H frame)	18"W x 31"H (duct) (18"W x 36"H frame)	36"W x 31"H (duct) (36"W x 36"H frame)
C - Frame	4"W x 4"H (duct) (6"W x 7"H frame)	22"W x 19"H (duct) (24"W x 24"H frame)	70"W x 30"H (duct) (72"W x 36"H frame)	16"W x 30"H (duct) (18"W x 36"H frame)	34"W x 30"H (duct) (36"W x 36"H frame)	16"W x 30"H (duct) (18"W x 36"H frame)	34"W x 30"H (duct) (36"W x 36"H frame)

Vertical Sizing

		2000 fpm, 4 in.wg		4000 fpm, 4 in.wg
Sizes	Min Panel	Max Single Panel*	Max Assembly	Max Single Panel
A - Frame	4"W x 4"H	36"W x 36"H	72"W x 36"H	18"W x 36"H
B - Frame	4"W x 3"H (duct) (4"W x 5"H frame)	36"W x 32"H (duct) (36"W x 36"H frame)	72"W x 32"H (duct) (72"W x 36"H frame)	18"W x 32"H (duct) (18"W x 36"H frame)
C - Frame	4"W x 4"H (duct) (6"W x 7"H frame)	34"W x 31"H (duct) (36"W x 36"H frame)	70"W x 31"H (duct) (72"W x 36"H frame)	16"W x 31"H (duct) (18"W x 36"H frame)

*Dampers greater than 36"W have a maximum single panel size of 18"W.

Horizontal Mount

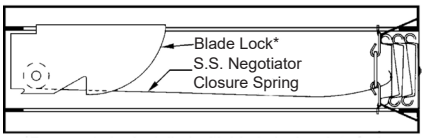

* Damper to be installed with blade lock points facing downward and with access from above.

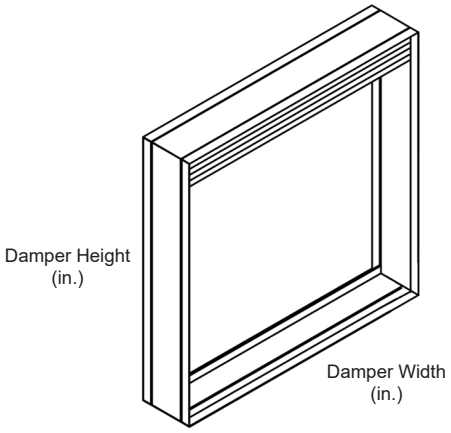

Vertical Mount

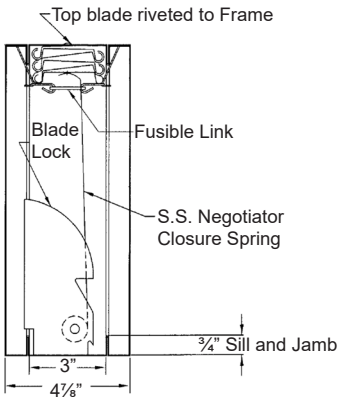

Item #	Qty	Damper Size	Horizontal	Vertical	165°F	212°F		
			Orientation		Fusible Link			Union Made

Arch. / Eng.:		EDR:		ECN:		Job:	
Contractor:							
Project:		Date:		DWN:		DWG:	

In the interest of product development, Cesco Products reserves the right to make changes without notice.

Division of Mestek
Member of AMCA

450 Riverside Dr • Wyalusing PA, 18853
Phone: 570-746-1888 • Fax: 570-746-9286
www.cescoproducts.com